Technology Exploration Forum

Cloud Scale Data Center Requirements

Tom Issenhuth
Microsoft Corporation

Microsoft

Cloud Scale Data Center vs Telecom

- Today most optical interfaces available are designed around telecom requirements
- Cloud scale data centers have different requirements that need to be specifically addressed
- 99.999% hardware availability not required
  - Hardware needs to be just good enough, not perfect
  - Equipment always fails, you just need to plan for it
- 3 to 5 year equipment life spans
  - Short economic life span of server equipment and the supporting network means we are constantly deploying new equipment and removing the old
- Standards are nice but not required
  - Deployments are in large, self contained units so multivendor or multigenerational interoperability is not a concern
- Volumes
  - Cloud Scale Data Centers deploy things 10,000s at a time
- Reduced specification ranges
  - Range of applications and environmental aspects are more limited
- QSFP+ is the primary interface of choice
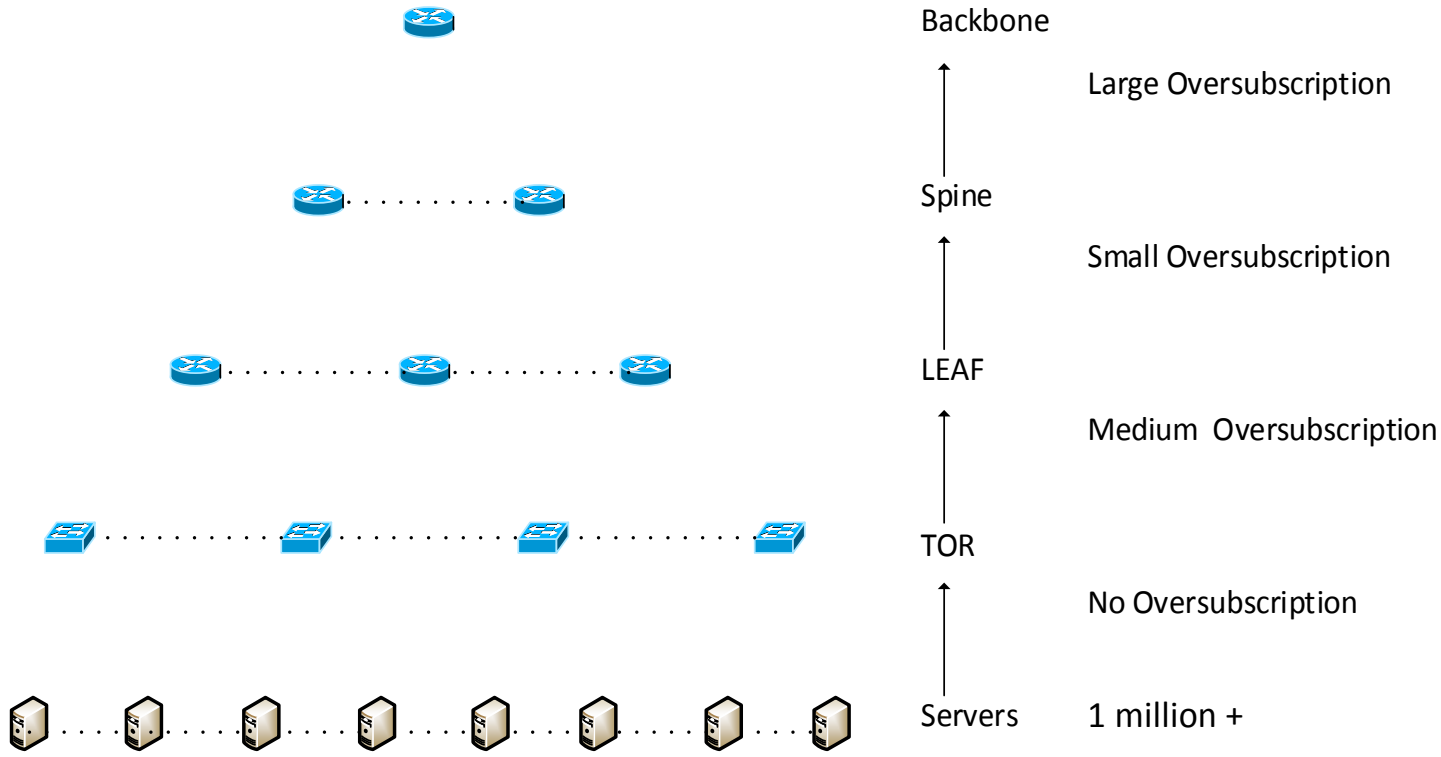
Size of Opportunity