Technology Exploration Forum

Rumors of the Demise of NRZ are Greatly Exaggerated

Chris Cole
Finisar

Finisar®

Communications Background

- bits/sec = no. channels * mod. rate * mod. order (bits/symbol)
- communication interfaces historically start with:
    1. one channel
    2. simple modulation (1bit/symbol)
    3. bit rate = mod. rate
- No. channels and mod. order are increased are only when mod. rate hits a fundamental limit:
    1. channel
    2. technology
- 10Gb/s and below optics are one channel NRZ
- 40Gb/s and 100Gb/s mainstream optics are four channel NRZ
- ≥1Tb/s optics will be multiple channels and higher order mod.
- Should <1Tb/s optics transition to higher order mod?
- Only if necessary, i.e. when mod. rate hits a fundamental limit

2x 50G NRZ λs

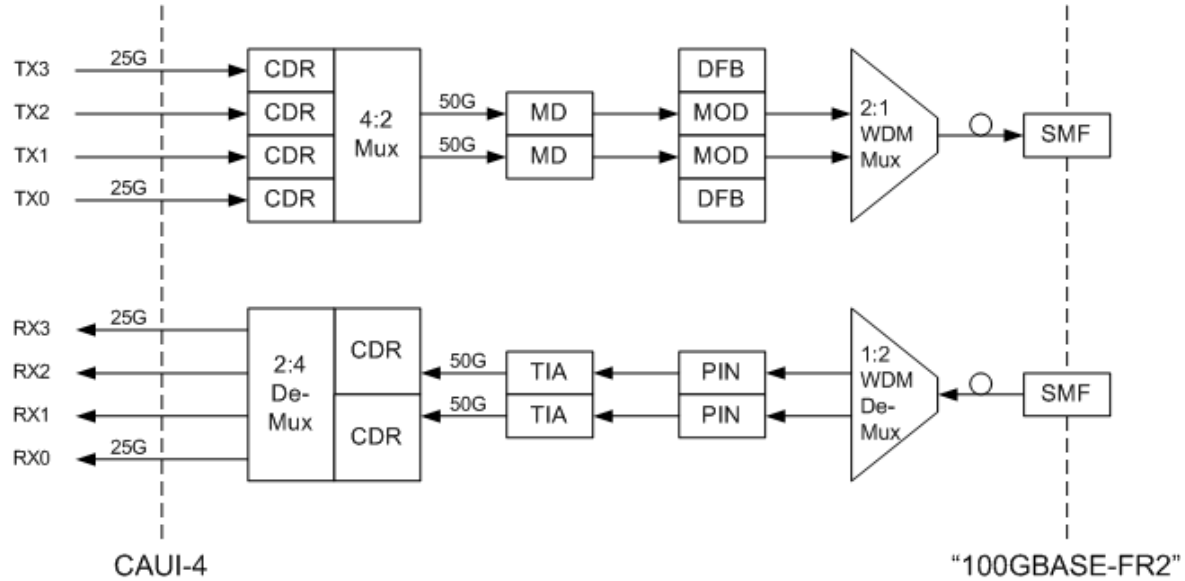

1x 100G PAM4 λ

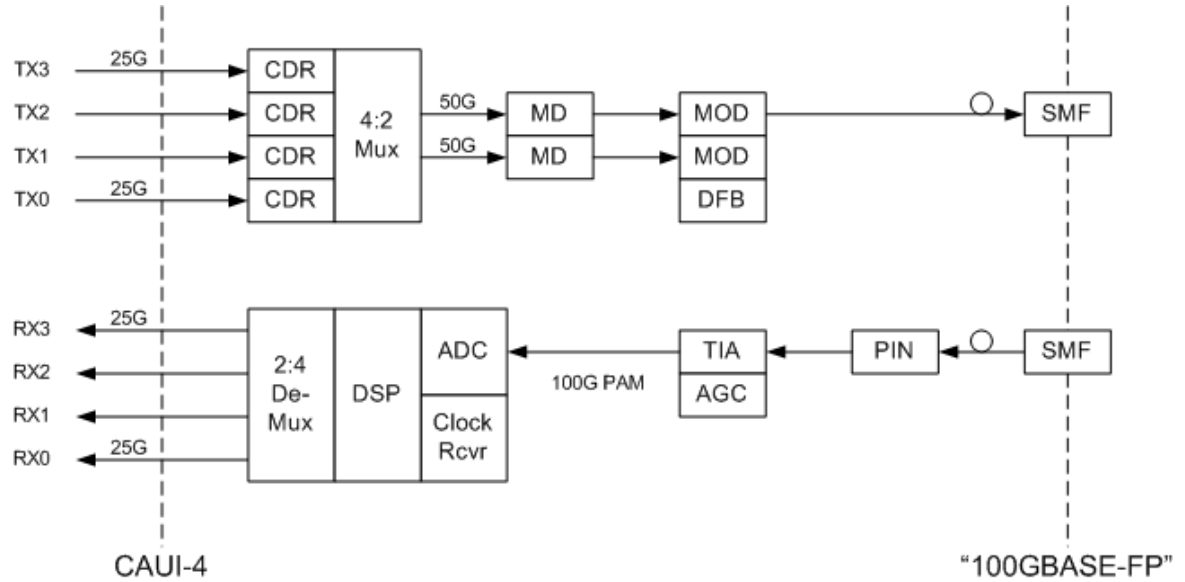

2x 50G NRZ vs. 1x 100G PAM4

- Is 2x 50G NRZ optical interface at a fundamental mod. rate limit?
  1. no channel limit
  2. no technology limit
- Differences between 2x 50G NRZ and 1x 100G PAM4:
  - 1 extra CW DFB laser vs. ADC and DSP
  - everything else is a wash
- 1x100G PAM4 is a nice to have, not a must have
- This is not a compelling case for a dramatic increase in complexity