Technology Exploration Forum

DMT Modulation is The Solution

Beck Mason
JDSU

JDSU

The Challenge

- Data centers are getting larger and interconnects are scaling to 100G and beyond
- Current 100G interfaces are based on multi-channel WDM or SDM Parallel solutions operating at 25Gbaud
- While currently very effective ultimate scaling of cost and power for these solutions will be limited
- Transitioning to 400G by a combination of increased baud rate or channel count is possible but increasingly less economical
- We need a more efficient solution

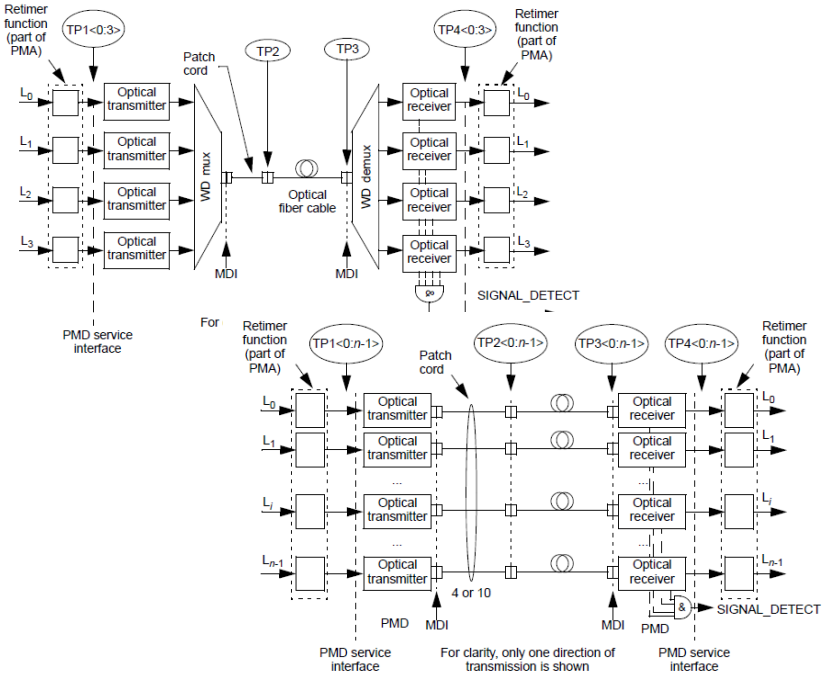

The Solution

- Advanced modulation formats that enable >1 bits/Hz are the solution
  - Already standard for long haul DWDM applications
  - Trades off SNR for BW
  - Takes the complexity out of the optical domain and into the electronic domain – better cost and power scaling
- Multiple approaches being discussed
  - PAM, DMT are the leading candidates
- DMT

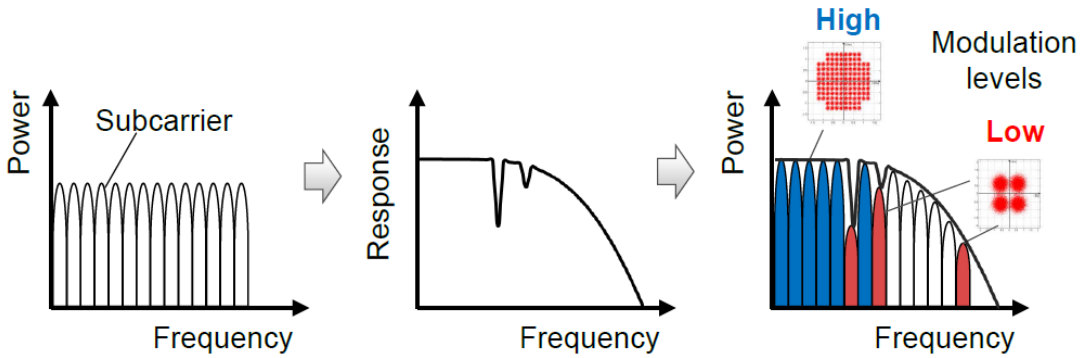

- **DMT Advantage**
  - 100G on a single carrier
  - Lower bandwidth optics and electronics
  - Better jitter tolerance
  - More tolerant to nonlinearity
  - Better SNR capability
  - More tolerant to system and link impairments
  - Adaptive
  - Lowest cost solution
  - Proven success in ADSL

T. Tanaka, IEEE Austin meeting, Nov 2012